ROTARY METER SERIES FMR

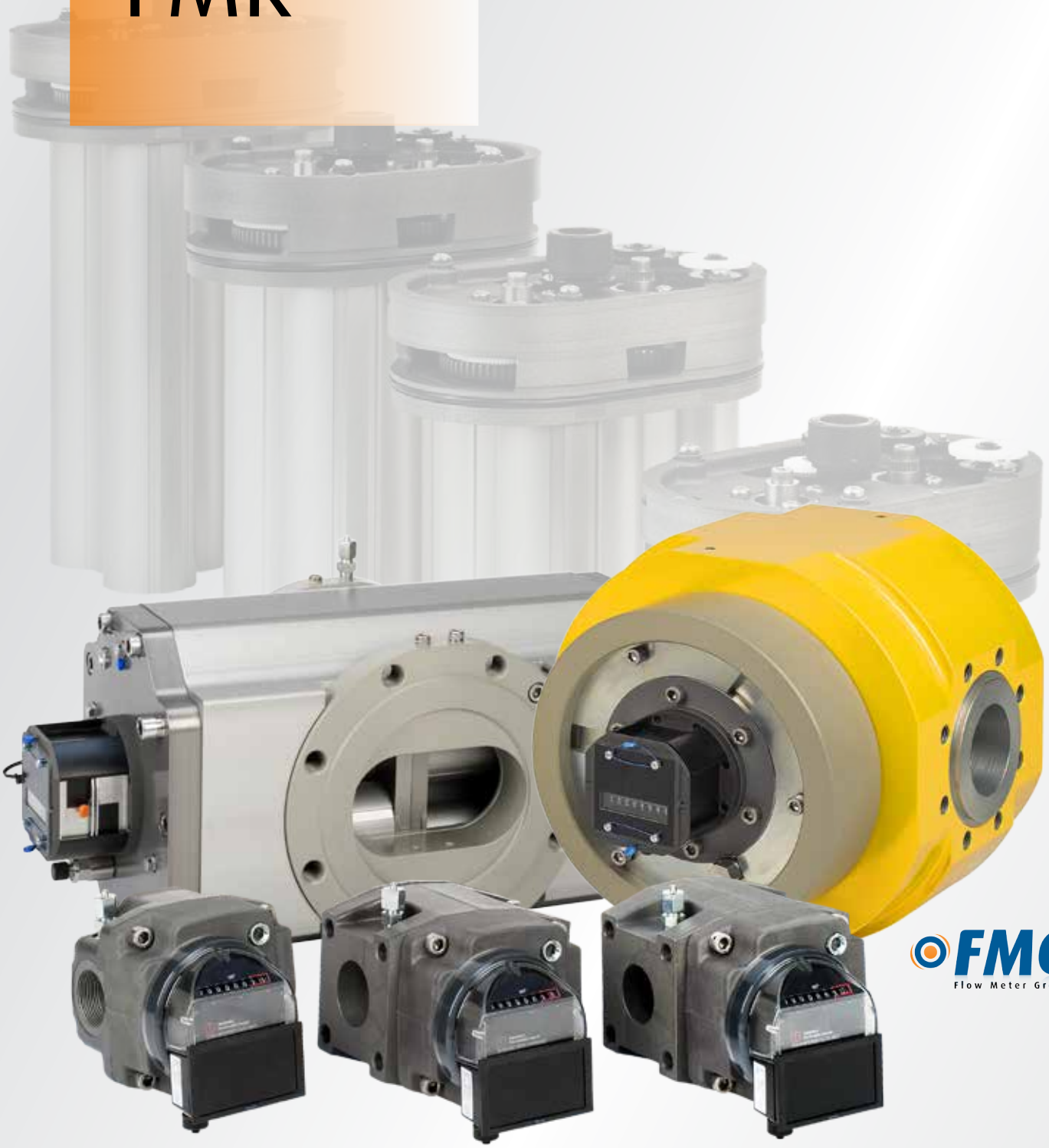

FMG
Flow Meter Group

MESURA METERING ®

Mesura Metering S.R.L.
Via Gavardina 10/H
25081 Bedizzole - Brescia (Italy)
info@cavagnagroup.com
www.cavagnagroup.com

Introduction

The FMG series of rotary gas meters are designed to meet the highest demands of reliable and accurate measurement of gas flow. The meters are MID approved and fully comply with EN12480 and OIML R137. The compact exchangeable aluminum cartridge allows local repair and on-site cleaning. The robust design of the casing and the cartridge make the meter less sensitive to installation stresses caused by the connecting piping. A significant amount of misalignment of the connecting piping/flanges can be tolerated by the meter without affecting the meter performance by jamming the impellers.

The aluminum casing of the FMR (body and front plate) is designed for working pressures up to 20 barg with a safety factor of 4. The square impellers and the improved position of the main bearings and shafts, make the meter less sensitive to overload and pressure shocks. The aluminum index and the protection of the LF pulsers with the associated magnets, make the meter less sensitive for manipulation by externally applied magnets or other external forces. Tampering of meters with strong neodymium magnets is one of the major concerns of utility companies, as this kind of manipulation is very difficult to detect or prove. In order to be prepared for the “smart grid”, the index can also be equipped with an intelligent encoder.

The unique proprietary oiling system, where the oil is distributed directly to the timing gears by means of a disc, eliminates oil loss at high rotor speeds and will lubricate the timing gears at very low loads. All plugs and oil sight glasses are in the front of the meter, allowing the meter to be installed in very compact installations.



Principle

The FMG rotary gas meter is a displacement type gas meter. The actual measurement is performed by two figure 8-shaped impellers (rotors) rotating within a measurement chamber. During a full revolution of the rotors a fixed volume is displaced from the inlet to the outlet of the meter. The number of revolutions represents the amount of volume passed. The volume is displayed on a direct read counter type index. Several low and high frequency pulsers can be used for flow computing or control purposes.

Applications

The FMR series of rotary meters is suitable for custody transfer gas measurement of all non-corrosive gases such as natural gas, propane, butane, air, hydrogen, etc. Typical applications are:

- Gas distribution in low, medium or high pressure networks
- Industrial applications
- Master meters for test benches

Special constructions can be supplied for use under extreme conditions like higher temperatures and corrosive gases.

Accuracy

Each FMR rotary meter is tested with atmospheric air to traceable (Dutch NMi) calibrated references. It has been proven – as part of the type approval testing - that the difference between the accuracy at atmospheric air and at high pressure natural gas is negligible.

Typical metrological characteristics

Accuracy Qt to Qmax:	± 1% or better
Accuracy Qmin to QT:	± 2% or better
Repeatability:	better than 0.1%

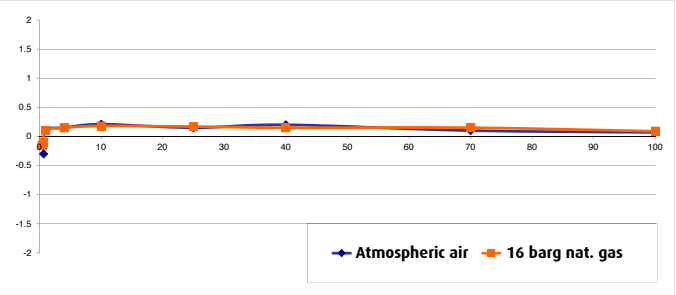

Pressure Loss

The average pressure loss (see tables pages 6-7) of the FMR rotary meter using atmospheric natural gas with a relative density of 0.6 is measured at one (1) diameter upstream to one (1) diameter downstream of the meter on straight pipe of the same size as the meter. The pressure loss across the FMR rotary meter for various gases and other operating pressures may be approximated from the pressure loss equation:

Measuring range

$$Q = Q_{min} \sqrt{\frac{P_{atm}}{P} x \frac{1.29}{\rho}} [m^3/h]$$

Pressure loss

$$\Delta P_2 = \Delta P_1 \, x \, \frac{d}{0.6} x \left(\frac{P}{P_{atm}}\right) x \left(\frac{Q}{Q_{max}}\right)^2 [Pa]$$

ΔP_2 = Pressure drop at P and Q_{max}
ΔP_1 = Pressure drop at Q_{max} (See tables pages 6 and 7)
P = Operating pressure of the meter in bar absolute
P_{atm} = Atmospheric pressure in bar absolute (1.01325 bara)
Q = Instantaneous flow in m^3/h

Q_{max} = Max. Flow rate in m^3/h
Q_{min} = Min. Flow rate at atmospheric pressure in m^3/h
d = Relative density of the gas (air = 1)
ρ = Density of the gas at atmospheric pressure



Main Features

- Flow range 0.2 – 1000 m3/h
- Diameters DN25 – DN200 (1" – 8")
- Pressure rates PN 10 – 100, ANSI 150 – 600
- MID, EN 12480 and OIML R137 1&2 approved
- MID temperature range -40 to +70°C
- Large rangeability > 1:160
- Cartridge design
- Robust construction
- Multi position
- Square impeller technique
- Compact installation
- Easy local repair
- On-site cleaning
- Tamper proof exchangeable index

Cartridge Design



All FMR meters consist of an aluminum cartridge inserted in a meter body. The cartridge can be removed and inserted with the body remaining installed This allows local repairs such as replacement of the main bearings and on-site cleaning to be carried out without removing the meter body. Particular owners of older networks, suffering from dirt and/or condensate, will benefit from the ability to remove the cartridge. FMG has a cartridge exchange program to replace older cartridges with new calibrated ones.

Superior Metrological Performance

Starting with the G40, all meters are approved according to both EN12480 and OIML R137/1 for rangeabilities up to 1:160 and as such can, on request, be designated as Class 1.5 meters. In situations where the installation or gas conditions are severe, the risk of rejection is greater when recalibration is done against in-service tolerances. The designation of class 1.5 (instead of 1.0), while still maintaining the class 1.0 accuracy limits, could be of interest since the in-service tolerances of a class 1.5 meter are significantly larger than the class 1.0 tolerances.



Square Impeller Technique

The use of square impellers not only makes the meter very robust and short, but also improves the accuracy and rangeability. The unregistered leakage causing an error at minimum capacity, thus limiting the rangeability, is significantly smaller for square impellers (shorter profile) compared to the traditional long impellers.

Prepared for the future

The FMR series use a fix gear ratio in the index (no adjustment gears in the index). The index is connected to the meter body by means of a special bayonet connection. After removing the main seal (allowed under supervision of the local authorities or accredited laboratory), the index (and as such the functionality of the meter, like number and type of sensors, magnetic protection, smart communication, electronic display, etc.) can be changed in a matter of minutes. This unique feature makes the FMR series of rotary meters future proof.



Robust Construction

In the new cartridge FMR design, the impellers, timing gears and bearings are fixed and positioned by a synchroplate. Since this synchroplate is machined in one operation, the tolerances can be controlled and maintained at a very high level. As a consequence, the clearance between the impellers and the meter body is equally divided and as such maximized, making the meters less sensitive to dirt and debris. The short impeller and high strength shaft connecting the timing gear to the impeller overcomes flexing or bending of the impellers, hence the meters are less sensitive to flow and pressure shocks. Severe intermittent on/off applications are typically handled without damage. Temporarily overloading the meter up to 50% of the maximum capacity will not cause any degradation of the metrological quality.

Basic Index (Standard)



The basic index consists of a UV-resistant polycarbonate cover glued to an aluminum frame. The aluminum frame will give strength to the index and as such sufficient protection against mechanical interference (Tampering). The index is 100% sealed (IP67) by multiple layers of glue. The index can be rotated over 350° for flow directions right-left, left–right and top-down. The index is equipped with multiple LF switches and normally closed tamper contacts.

Universal Index



The extremely strong double walled, aluminum, index is designed to withstand any external interference. To protect against large forces applied to the index window, an additional glass window is mounted beneath the polycarbonate window. This glass window will break in case excessive force is applied to the index. On request the index can be sealed up to IP67. Four slots in the outer extrusion can be used for various add-ons such as multiple connectors, additional outgoing shafts, marking plates with bar codes, etc. The use of slots makes the index multifunctional and as such “prepared for the future”.

Instrument Drive / Side reading

The instrument drive plate can be used to mount auxiliary equipment like chart recorders or mechanically driven volume correctors. The rotation of the outgoing shaft is equal to one m3 or CF or (sub) multiple thereof. A single or double counter can be added to the instrument drive. The instrument drive can be rotated over 900°, hence allowing both horizontal and vertical installation. The instrument drive can be equipped with low frequency pulsers, an encoder as well as a reverse flow lock, preventing meters from registering backwards as a result of tampering. On request the index can be supplied as side reading (without instrument drive) allowing the meter to be installed in an extremely high or low position. The rotating direction of the output shaft can be changed on site.



Options for Indexes and Instrument Drive

The index or instrument drive can be equipped with several options making the meter prepared for the future:

Magnetic Field Protection: Tampering of meters with strong neodymium magnets is one of the major concerns of utility companies, as this kind of manipulation is very difficult to detect and / or prove. The LF pulsers and its driving magnet can be shielded to overcome tampering with an externally applied magnetic field. Magnetic fields up to 500 mT will not have an effect on the pulse counting.

Reverse Flow Lock: In order to avoid tampering by reverse flow, the index or instrument drive can be equipped with a Reverse Flow Lock.

Wiegand Pulsers: the Index can be equipped with multiple Wiegand pulsers. The Wiegand pulsers have significant advantages over the traditionally used Reed contacts. Wiegand sensors do not face "bouncing" problems and the actual live time is not limited as much as the traditional Reed contacts.

Intelligent Index/Encoder: the index can be equipped with an intelligent encoder. The encoder sends out the total volume with an interval of 400 msec. The encoder uses a standard NAMUR serial data format, and can be modified to special applications on request. The encoder is powered by one AA cell battery guaranteed for 12 years of operation. On request two AA cells can be installed for a guaranteed life time of 20 years. The encoder is equipped with a special Hall sensor to detect and register interferences from external magnets. Several programmable inputs/outputs are available for advanced anti-fraud functions.



High Frequency Pulsers

FMG rotary meters can be equipped with a high frequency sensor. Unique is the fact that the high frequency sensor generates two independent phase shifted signals and as such the flow direction can be monitored.

Tamper Proof

All plugs, sensors and oil sight glasses can be sealed (wire) and as such the meter is not vulnerable to tampering. If, for example, the oil compartment was accessible, the metrological performance could be changed (increasing or decreasing mechanical friction) by changing oil properties. In addition to the mechanical precautions, the index can be equipped with an intelligent encoder, recording time stamping of all attempts of unauthorized access or manipulation, such as magnetic interference, reverse flows, etc.

Double Integrated Thermowells

FMG rotary meters can be equipped (optional) with two integrated thermo wells. Having two thermowells, the verification of Electronic Volume Conversion Devices (when built on to the meter) can be done on site and online without interruption of the operation. By comparing the reading of EVCD temperature sensor with a calibrated temperature sensor or one of known accuracy placed in the second thermowell, the EVCD can be verified.



Improved thermowell

Classic thermowell

Installation



Installation of FMG rotary meters can be horizontal or vertical. Since the meter is designed for multi position, consideration need only be given to the arrows showing the flow direction. After the meter is installed, the index can be rotated to the correct position. The index can be rotated over 350º. FMG rotary meters can be metrological sealed to suit various conditions from total flexibility to highly tamper proof.

The FMR DN50 meters are also available with a length of 150mm to exchange for DN50 (2″) turbine meters.

Maintenance

FMG rotary gas meters have a rotating disc for distributing the oil directly to the timing gears. The mechanism is designed to prevent oil loss at high loads or from pressure variations and maintains sufficient oiling at low flows. Since the oil system operates between 40% and 120% of the maximum flow, sizing of the installation is no longer critical. The oil supplied with the meter is suitable for 10 years of operation under normal conditions.



Cleaning / Easy repair

After removing the front cover of the meter, the entire cartridge can removed for cleaning. During this cleaning process, the meter body can remain in line. For cleaning purposes the seals of the front cover have to be removed. The construction of the FMG rotary gas meters allows local repair or replacement of all the main bearings without special tools. If the main bearings are to be replaced, the critical timing of the impellers will be maintained. It is recommended that replacement of the main bearings (mounted in the synchro-plate) is performed by a skilled technician in a clean environment. The rear bearings can be replaced with the meter body in situ. In a situation where a meter is locked by dirt, the cartridge can be removed for cleaning.

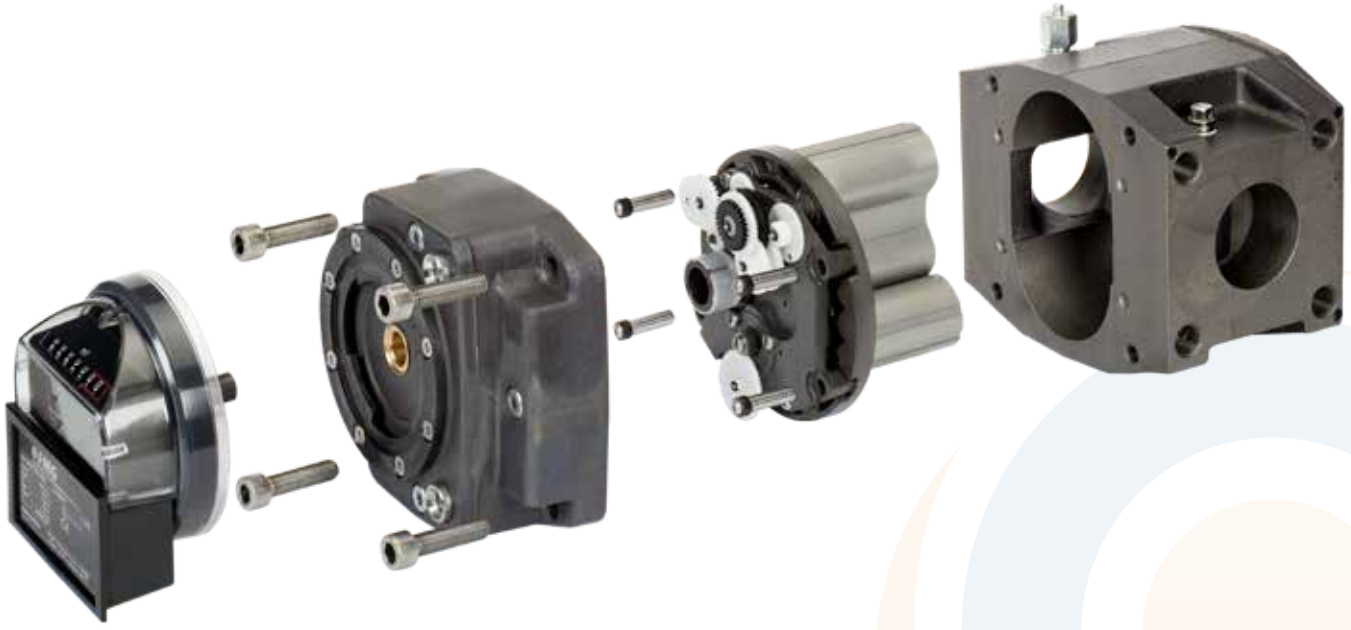

The use of a cartridge (pre-calibrated) and the accessibility of the front and rear bearings without the need for removing the timing gears, make the FMG series of rotary meter unique in terms of repair. Any repair shop can repair or re-condition the meters without special skills and tools. When regulation permits, a new, calibrated cartridge can be installed.

EVCD mounting

FMG rotary meters can be equipped (optional) with two thermo wells and two pressure tapping points. Therefore the rotary meters can be supplied with an Electronic Volume Conversion Device (EVCD). FMG offers a large variaty in conversion devices so all required data can be provided and the best solution for every project can be assembled.

Refer to the special brochure for more information about the Electronic Volume Conversion Devices FMG is able to supply or contact a local supplier.





Technical Specification

Metrological approvals:	compliant with the MID 2004/22/EC compliant with OIML R137 compliant with EN-12480
ATEX approvals:	sensors compliant with Ex ia IIC T4... T6 Gb (-40ºC ≤ Ta +70ºC) encoder compliant with Ex ib IIB T3... T6 Gb (-25ºC ≤ Ta +55ºC)
Flow rates:	0.2 m^3/h up to 1000 m^3/h
Nominal diameters:	from DN25 to DN200 mm (1″ to 8″).
Mounting position:	horizontally or vertically
Body	compliant with the Pressure Equipment Directive 97/23/EC
Temperature Range:	ATEX: -25°C to +70°C MID: -25°C to +70°C (lower temperatures on request) PED: -20°C to +70°C (lower temperatures on request)

Materials:

Body:	aluminum	Shafts:	stainless steel
Impellers:	aluminum	Gears:	delrin
Cartridge	aluminum	Index frame:	aluminum
Timing gears:	steel	Index cover:	polycarbonateECI
Bearings:	stainless steel		

Integrated Bypass (Security of Supply)

Rotary meters are used in a wide variety of industrial applications due to their reliability and accuracy over an extremely large range. Unlike other meter types such as turbine meters and ultrasonic meters, a rotary meter is always accurate unless the rotors become jammed. In reality, the rotary meter is a digital device, it runs and is accurate or it stops. The only drawback of a rotary meter is that when it stops (locks up), the gas flow is interrupted. As such, there is no security of supply unless precautions are taken.



The most convenient and reliable precaution is to have an automatic bypass valve integrated in the meter. This provides security of supply as the bypass opens automatically when the differential pressure over the meter reaches a certain pre-set level (various springs for different set points are available).

The FMG series of rotary meters can be equipped with an automatic bypass (MID approved). The bypass operates as a "reverse" safety shut-off valve, whereby the bypass valve is triggered by an accurate spring loaded diaphragm. When operated, the opened bore allows the full flow of gas to bypass the locked impellers with a significantly lower pressure loss compared to spring loaded bypass systems.

Bypass closed



Bypass open

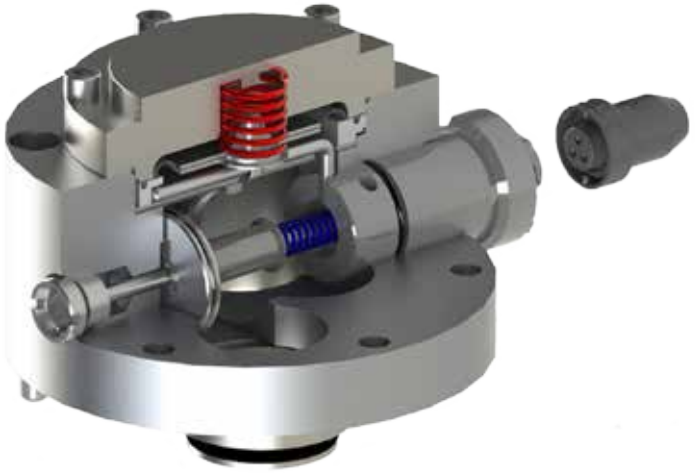

The mechanism in the bypass works on a high force level (large diaphragm and strong springs) and as such, the bypass is very reliable over its expected life time. With two reed switches (one normally closed, one normally open) the status of the valve can be monitored (e.g. by an EVCD). It occasionally happens that an operator will open the inlet or outlet valves too fast and activate the bypass. In such a case, the bypass can be re-set onsite. A removable plug provides access to the reset mechanism. Note: In some countries local authorities require this plug to be sealed.

Technical Data Bypass

Materials: Pressure containing parts: anodized aluminum
Others: Stainless steel
Diaphragm: NBR

Available springs (set point): 150 mbar, 300 mbar and 450 mbar

Available Connectors : Neumueller (other on request)



Technical Specification

	Performance							
Volume V (dm^3)	G-value (-)	Qmax (m^3/h)	Qmin Atm. Air (m^3/h)	Qt Atm. Air (m^3/h)	Diameter D (mm)	Pmax (bar)	ΔP* (Pa)	Basic Transfer** (rev-m^3)
0.24973	G6	10	0.25	0.5	Threaded	21	8	4004.325
	G10	16	0.25	0.8	Threaded	21	20	4004.325
	G16	25	0.25	1.25	Threaded	21	48	4004.325
	G25	40	0.25	2	Threaded	21	120	4004.325
0.38846	G10	16	0.25	0.8	40 or 50	21	12	2574.268
	G16	25	0.25	1.25	40 or 50	21	28	2574.268
	G25	40	0.25	2	40 or 50	21	72	2574.268
	G40	65	0.25	3.2	40 or 50	21	190	2574.268
0.61044	G16	25	0.25	1.25	40 or 50	21	25	1638.163
	G25	40	0.25	2	40 or 50	21	64	1638.163
	G40	65	0.25	3.2	40 or 50	21	170	1638.163
	G65	100	0.25	5	40 or 50	21	400	1638.163
0.72518	G16	25	0.2	1.25	40 or 50	21	13	1378.968
	G25	40	0.2	2	40 or 50	21	32	1378.968
	G40	65	0.2	3.2	40 or 50	21	85	1378.968
	G65	100	0.2	5	40 or 50	21	200	1378.968
	G100	160	0.2	8	50 or 80	12	512	1378.968
1.16028	G40	65	0.4	3.2	50 or 80	21	23	861.8609
	G65	100	0.4	5	50 or 80	21	74	861.8609
	G100	160	0.4	8	50 or 80	21	190	861.8609
	G160	250	0.65	12.5	50 or 80	12	460	861.8609
1.45036	G65	100	0.6	5	80 or 100	21	94	689.4840
	G100	160	0.6	8	80 or 100	21	240	689.4840
	G160	250	0.6	12.5	80 or 100	21	635	689.4840
1.80867	G65	100	0.6	5	80 or 100	21	29	552.8925
	G100	160	0.6	8	80 or 100	21	74	552.8925
	G160	250	0.6	12.5	80 or 100	21	180	552.8925
	G250	400	1	20	80 or 100	12	460	552.8925
1.98191	G100	160	1	8	80 or 100	21	78	504.5638
	G160	250	1	12.5	80 or 100	21	190	504.5638
	G250	400	2.5	20	80 or 100	12	460	504.5638
3.17106	G160	250	1.6	12.5	80 or 100	21	90	315.3520
	G250	400	1.6	20	80 or 100	21	230	315.3520
	G400	650	2.5	32	80 or 100	12	607	315.3520
5.15298	G250	400	2.6	20	100 or 150	21	106	194.0625
	G400	650	2.6	32	100 or 150	21	280	194.0625
	G650	1000	6.25	50	100 or 150	12	662	194.0625

*. ΔP_1 is measured under atmospheric conditions with natural gas with relative density of 0.6 (air = 1)
**. Values may vary 5% due to machining tolerances

Dimensions

Dimensions Low Pressure (ALU)							
L	H	A		B	C		Weight (kg)
(mm)	(mm)	Univ. (mm)	Basic (mm)	(mm)	Univ. (mm)	Basic (mm)	ALU
121/150	163	173	156	33	140	123	5
121/150	163	173	156	33	140	123	5
121/150	163	173	156	33	140	123	5
121/150	163	173	156	33	140	123	5
171	163	257	240	68	189	172	7
171	163	257	240	68	189	172	7
171	163	257	240	68	189	172	7
171	163	257	240	68	189	172	7
150/171	163	257	240	68	189	172	7.5
150/171	163	257	240	68	189	172	7.5
150/171	163	257	240	68	189	172	7.5
150/171	163	257	240	68	189	172	7.5
171	202	268	251	72	196	179	12
171	202	268	251	72	196	179	12
171	202	268	251	72	196	179	12
171	202	268	251	72	196	179	12
171	202	268	251	72	196	179	12
171	202	320	303	92	228	211	14
171	202	320	303	92	228	211	14
171	202	320	303	92	228	211	14
171	202	320	303	92	228	211	14
171/241	202	371	354	118	253	236	15
171/241	202	371	354	118	253	236	15
171/241	202	371	354	118	253	236	15
171	202	396	379	130	266	249	19
171	202	396	379	130	266	249	19
171	202	396	379	130	266	249	19
171	202	396	379	130	266	249	19
241/260	288	334	317	126	208	191	32
241/260	288	334	317	126	208	191	32
241/260	288	334	317	126	208	191	32
241/260	288	403	386	160	243	226	38/41
241/260	288	403	386	160	243	226	38/41
241/260	288	403	386	160	243	226	38/41
241/260	288	518	501	218	300	283	48/51
241/260	288	518	501	218	300	283	48/51
241/260	288	518	501	218	300	283	48/51

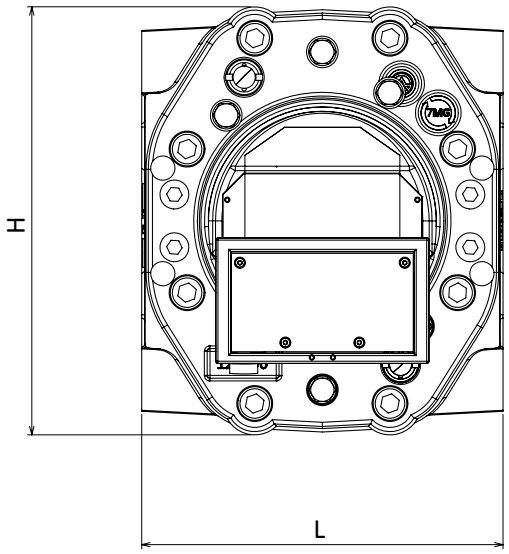

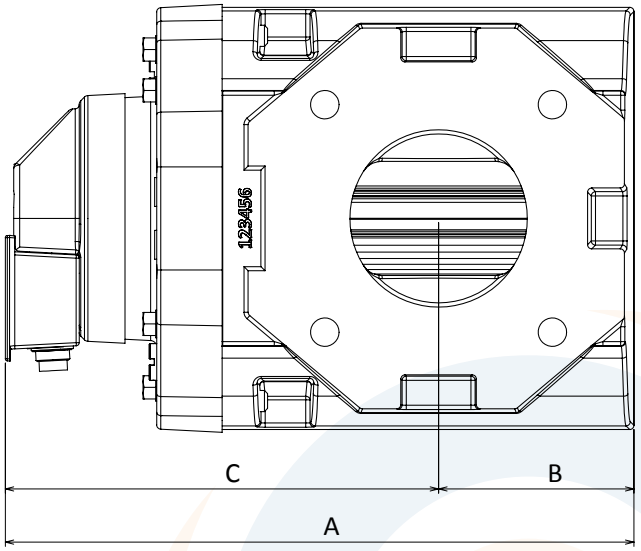

FMR-Dual Series (pulsation free)



Turbine meters have a limited range and must preferably be calibrated close to the operating conditions (high pressure natural gas). This limitation and the higher costs due to the calibration, make the larger rotary meters more popular as replacement for the turbine meter. To overcome the drawback of conventional rotary meters (pulsations and resonance), pulsation free rotary meters have been developed. These pulsation free rotary meters, using two phase shifted pairs of impellers, fully eliminate the pulsations by countering the characteristic sine wave and its resultant resonance. As a result the pulsation free rotary meters series DUAL are extremely quiet and accurate.



Another advantage is the use of relatively short impellers. Shorter impellers will not deform easily and as such provide reliable long term performance. The weak point of pulsation free meters can be the connection of the two impeller pairs as this mechanical coupling is very sensitive to load differences between the two sets of impellers. The FMG DUAL meter uses a significantly stronger spline and spline shaft to connect the two pairs of impellers.

Exchangeable flanges

By using exchangeable flanges, the installation connection of the meter can easily been changed from DIN to ANSI or from DN100 (4") to DN150 (6").



Performance & Dimensions FMR-Dual Series

	Performance					Dimensions Dual							
Volume V (dm^3)	G-value (-)	Qmax (m^3/h)	Qmin Atm. Air (m^3/h)	Qt Atm. Air (m^3/h)	Diameter D (mm)	L (mm)	H (mm)	A Univ. (mm)	A Basic (mm)	B (mm)	C Univ. (mm)	C Basic (mm)	Weigth(kg) ST
2.41277	G160	250	1	12.5	80 or 100	241/260	288	446	429	186	260	243	32
	G250	400	2.5	20	80 or 100	241/260	288	446	429	186	260	243	32
3.96382	G250	400	2.5	20	100 or 150	241/260	288	554	537	249	305	288	41
	G400	650	4	32	100 or 150	241/260	288	554	537	249	305	288	41
	G650	1000	4	32	150 or 200	241/260	288	554	537	249	305	288	41
6.34212	G400	650	4	32	150 or 200	241/260	288	692	625	318	374	357	51
	G650	1000	6,25	50	150 or 200	241/260	288	692	625	318	374	357	51

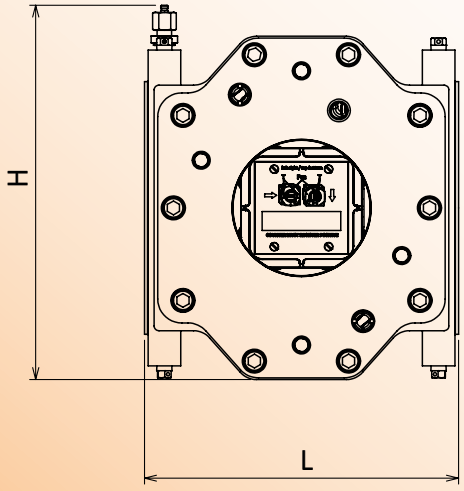

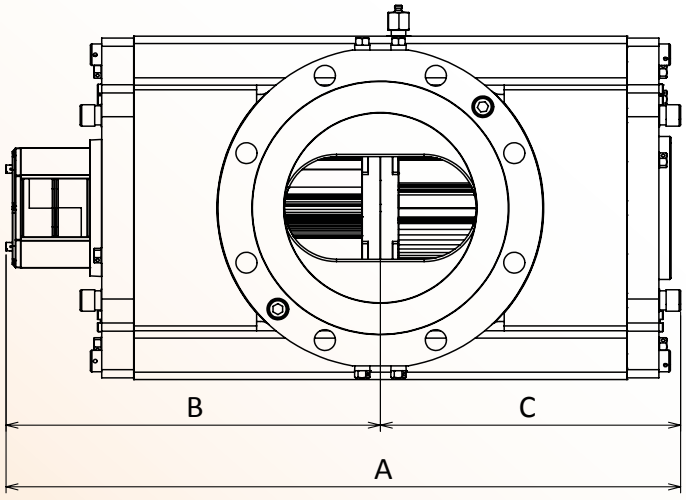

FMR Series for pressures up to 40 bar

The rotary meters are developed with an optimized body construction. Due to the special design and the strength of the aluminum construction the rotary meters can be used with higher pressures. Since this developement has been done as an optimization for the standard aluminum bodies there is no need of a steel body for pressure upto 40 bar.

The aluminum bodies are being provided with a special treatment to increase the strength but still maintain their low weight.



	Performance PN25, PN40 & ANSI300					Dimensions PN25, PN40 & ANSI300							
Volume V (dm^3)	G-value (-)	Qmax (m^3/h)	Qmin Atm. Air (m^3/h)	Qt Atm. Air (m^3/h)	Diameter D (mm)	L (mm)	H (mm)	A Univ. (mm)	A Basic (mm)	B (mm)	C Univ. (mm)	C Basic (mm)	Weigth(kg) ALU
1.16028	G40	65	0.4	3.2	50	171/241	202	320	303	92	228	211	11
	G65	100	0.4	5	50	171/241	202	320	303	92	228	211	11
1.45036	G100	160	0.6	3.2	80	241	202	371	354	118	253	236	15
	G160	250	0.6	5	80	241	202	371	354	118	253	236	15
5.15298	G250	400	2.6	20	100	260	288	518	501	218	300	283	51
	G400	650	2.6	32	100	260	288	518	501	218	300	283	51

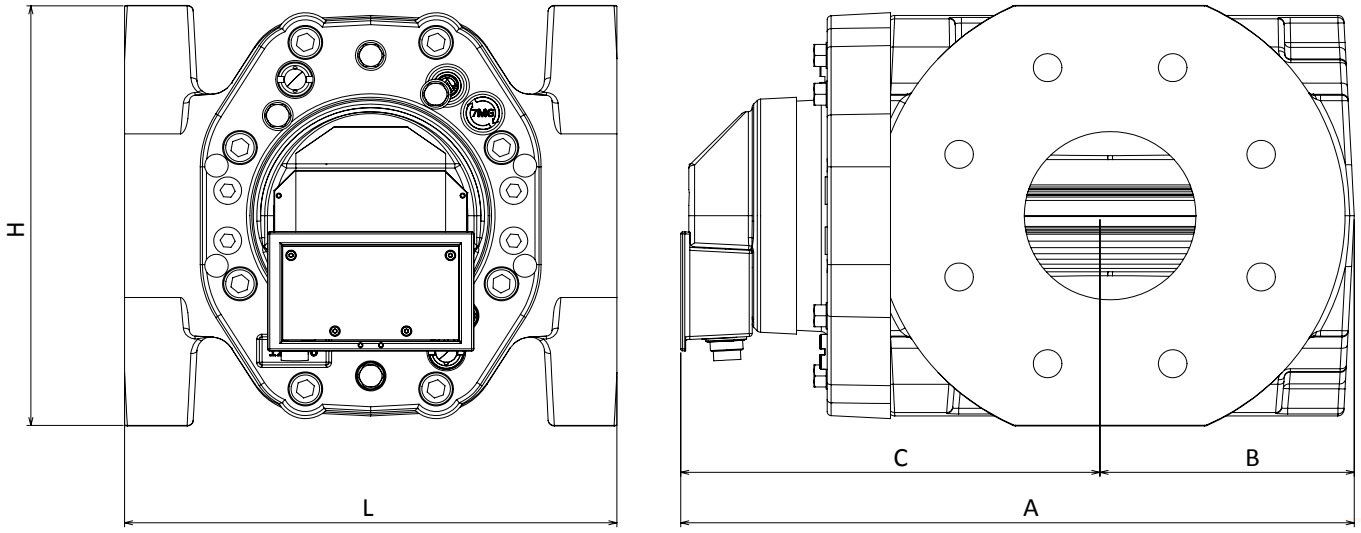

	Performance					Dimensions Dual							
Volume V (dm^3)	G-value (-)	Qmax (m^3/h)	Qmin Atm. Air (m^3/h)	Qt Atm. Air (m^3/h)	Diameter D (mm)	L (mm)	H (mm)	A Univ. (mm)	A Basic (mm)	B (mm)	C Univ. (mm)	C Basic (mm)	Weigth(kg) ST
2.41277	G160	250	1	12.5	80	260	288	446	429	186	260	243	32
	G250	400	2.5	20	80	260	288	446	429	186	260	243	32
6.34212	G400	650	4	32	100	260	288	692	625	318	374	357	51
	G650	1000	6,25	50	100	260	288	692	625	318	374	357	51

FMR-HP Series (for pressures up to 100 bar)

The FMG-HP series of rotary gas meters is designed to meet the highest demands of reliable and accurate measurement of gas flow under high pressure conditions. The meters fully comply with the EN12480 and OIML R137 and as such can be used for all custody transfer applications.

The actual meter body is made from aluminum and is kept in position by a steel meter housing. This housing holds the meter body, without any stress, in position between the adjacent flanges. Since the meter body is not affected by stress from the flanges or the piping, the clearances between the impellers and the body are optimized. As such the superb metrological performance achieved in the low pressure FMG rotary meter is maintained under high pressure conditions as well.



Due to the large rangeability of 1:100, the FMG-HP rotary meter is very suitable for small city gate stations as the actual load of this type of station varies widely. Square impellers and improved position of the main bearings makes the cartridge very robust and less sensitive to flow and pressure shocks. Unlike other approved flow metering devices, such as turbine meters and ultrasonic meters, a rotary meter can be installed close to regulators and without the need for extended straight pipe or specially prepared inlet sections.

Bypass for Security of Supply

The FMR-HP series can be equipped with a spring loaded bypass valve. If a meter locks, the differential over the bypass valve will increase and the valve will open allowing gas to pass. This security of supply feature makes the FMR-HP suitable for use in critical installations where gas flow cannot be interrupted. The opening of the bypass can be monitored by measuring the differential over the meter.

Exchangeable Cartridge

A compact exchangeable aluminum cartridge allows local repair, on-site cleaning and exchange. A pre-calibrated cartridge can be exchanged without affecting the accuracy. To access the cartridge only a relatively small and light weight cover needs to be removed.

Meter Body Design

To maintain the high accuracy and large rangeability, it is essential that the displaced volume does not change within the range of operating conditions. By separating the meter body from the actual pipeline and using the same material as the impellers, changes in displaced volume due to installation stresses, operating pressure and thermal expansion are eliminated.



Performance & Dimensions FMR-HP Series

	Performance					Dimensions High Pressure (STEEL)							
Volume	G-value*	Qmax	Qmin	Qt	Diameter	L	H	A		B	C		Weigth(kg)
V			Atm. Air	Atm. Air	D			Univ.	Basic		Univ.	Basic	
(dm^3)	(-)	(m^3/h)	(m^3/h)	(m^3/h)	(mm)	(mm)	(mm)	(mm)	(mm)	(mm)	(mm)	(mm)	ST
0.38846	G25	40	0.25	2	40 or 50	240	220	330	300	150	208	178	65
	G40	65	0.25	3.2	40 or 50	240	220	330	300	150	208	178	65
0.61044	G40	65	0.25	3.2	40 or 50	240	220	330	300	150	208	178	65
	G65	100	0.25	5	40 or 50	240	220	330	300	150	208	178	65
0.72518	G40	65	0.2	3.2	40 or 50	273	260	353	323	114	239	209	65
	G65	100	0.2	5	40 or 50	273	260	353	323	114	239	209	65
1.16028	G65	100	0.4	5	50 or 80	273	260	404	374	118	286	256	73
	G100	160	0.4	8	50 or 80	273	260	404	374	118	286	256	73
1.45036	G100	160	0.6	8	80 or 100	273	260	436	406	134	302	272	85
	G160	250	0.6	12.5	80 or 100	273	260	436	406	134	302	272	85
1.98191	G100	160	1	8	80 or 100	375	363	424	394	181	243	213	135
	G160	250	1	12.5	80 or 100	375	363	424	394	181	243	213	135
3,17106	G160	250	1.6	12.5	80 or 100	375	363	493	463	215	278	248	168
	G250	400	1.6	20	80 or 100	375	363	493	463	215	278	248	168
5.15298	G250	400	2.6	20	150	450	363	608	578	273	335	305	187
	G400	650	2.6	32	150	450	363	608	578	273	335	305	187

*. Larger capacities on request

