Industrial Diaphragm Gas Meter

It is a compact industrial gas meter designed to accurately measure volumes of natural gas, LPG and all noncorrosive gases. Its design minimizes installation costs and enables future field upgrades.

Application:

The long-term metrology stability makes it the right choice for demanding, high consumption commercial and industrial gas markets.

Metrology:

During preliminary test bench controls, the meter is 100% tested according to customer or national requirements.The design and the careful materials selection enable it to meet the highest demand in international markets in terms of accuracy and long-term stability.During the preliminary test controls on the sonic nozzle test benches, all meters are tested at Qmin, 0.2 Qmax and Qmax.

Operating principle:

The gas meter is a positive displacement diaphragm gas meter with a stand-alone twin chamber measuring mechanism. The twin chambers are each fitted with a flexible and gas-tight diaphragm, which is moved by the differential between the inlet and outlet pressure. Gas enters one side of the diaphragm plate, while on the other side it sluice through a separate port on the valve. When one side is full, the rotating mono-valve moves on to the next position, allowing the gas to fill the empty side. A transmission gear and a mechanical coupling or stuffing box transfer the reciprocating motion to the mechanical index.The measuring mechanism is housed in a robust, gas-tight casing.





Main features :

- Outside case made by high-quality sheet steel.

- Surface spray-paint protects from corrosion.

- Case closing use stainless steel for leakage protection.

- Diaphragm made by advance gluing and vulcanization process.

- Upper case and lower case fixed with glue for leakage protection.

- High accuracy and long reliability.

- Low noise level.

Technical Specifications:

Item		Unit	G6	G10	G16	G25
Nominal flow-rate		m^3/h	6	10	16	25
Max flow-rate(Qmax)		m^3/h	10	16	25	40
Min flow-rate(Qmin)		m^3/h	0.6	0.1	0.16	0.25
Cyclic volume		dm^3	2	5	8	15
Accuracy			Class 1.5			
Casing material			Steel			
Metrology			EN1359:1998/A1:2006 and OIML R137			
Total pressure absorption		Pa	≤200	≤300		
Max working pressure		bar	0.5			
Error	Qmin≤Q<0.1Qmax	%	±3			
	0.1Qmax≤Q≤Qmax	%	±1.5			
Display range min.		m^3	0.0002	0.002		
Display range max.		m^3	99999.999	999999.99		
Operation temperature		℃	-25 to +55			
Storage temperature		℃	-30 to +60			

C/ Manuel María Valencia No. 10, Los Prados, Santo Domingo, República Dominicana
(809) 560-1818 E-mail: carloslara@lpgtek.com

Accuracy curve:

G6 & G25

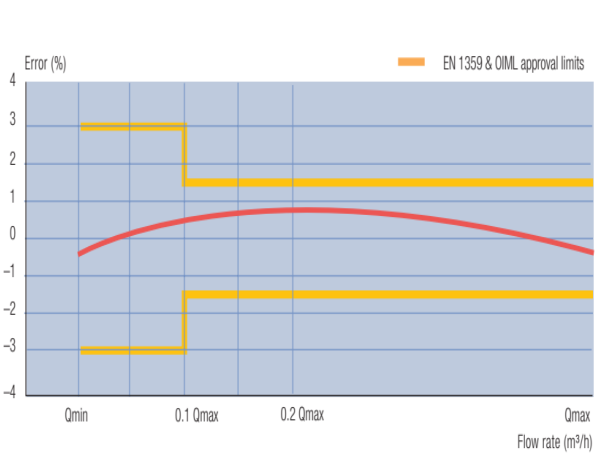

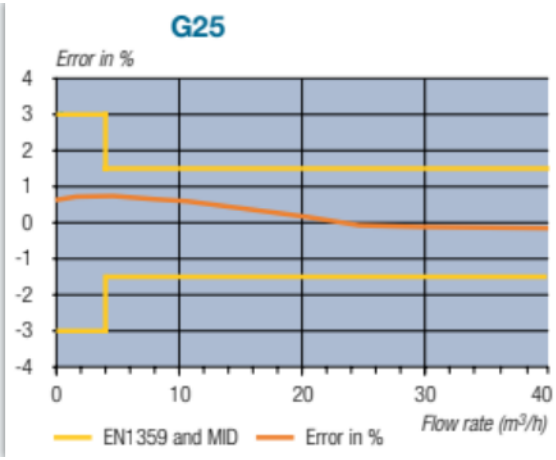

G10 & G16

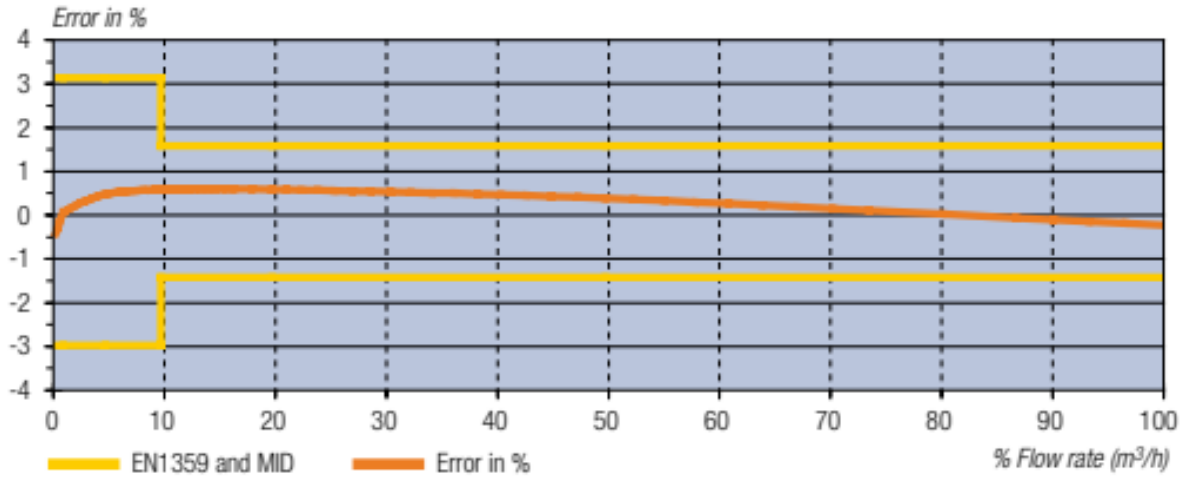

C/ Manuel María Valencia No. 10, Los Prados, Santo Domingo, República Dominicana
(809) 560-1818 E-mail: carloslara@lpgtek.com

Pressure loss curve:

G6 & G25

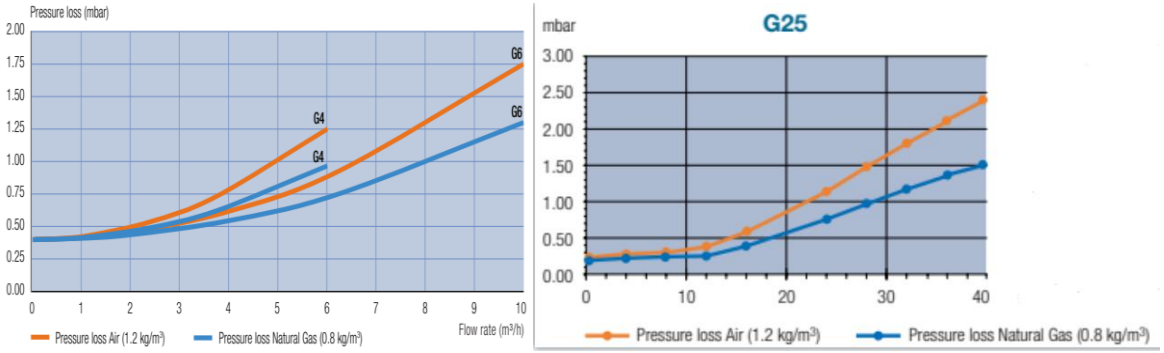

G10 & G16

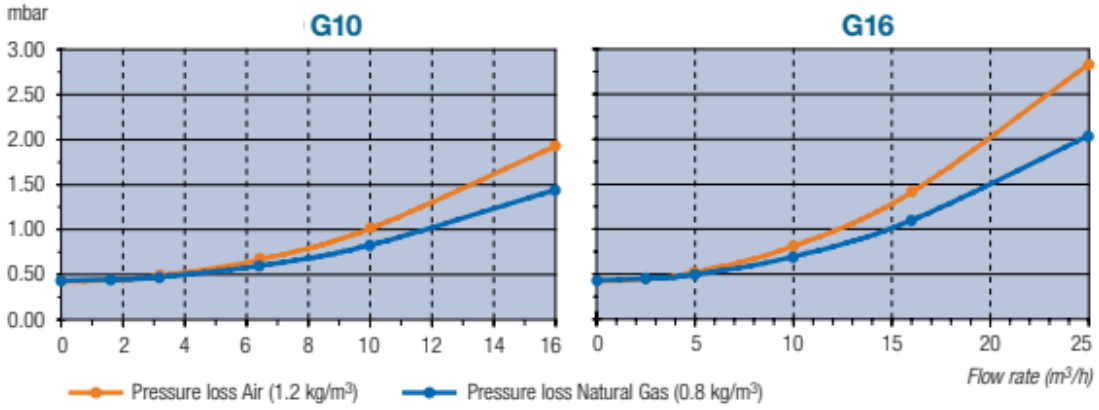

C/ Manuel María Valencia No. 10, Los Prados, Santo Domingo, República Dominicana
(809) 560-1818 E-mail: carloslara@lpgtek.com

◆ **Installation Dimensions**

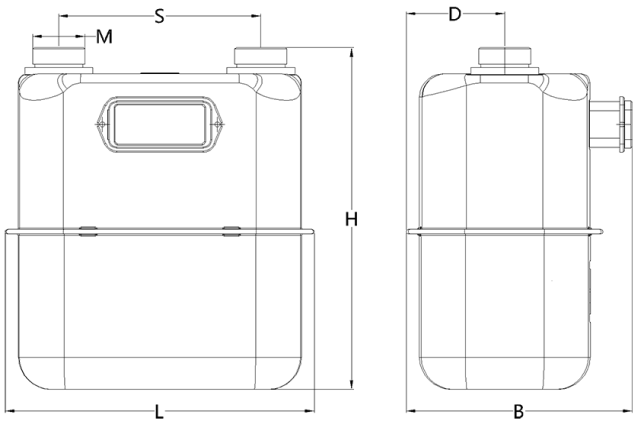

Model	H	L	D	B	S	M	Weight
G6	235	335	77	186	250	G 1” 1/4”	2.70
G10	335	284	92	216.8	180	G2”	5.3
G16	374	333	105.5	243	220	G2”	7.8
G25	437.5	411.5	129.5	289	280	G2”1/2"	13.2

◆ Using
- ➢ Please make sure the inlet gas pressure is less than the maximum working pressure.
- ➢ Don’t use fire to check meter’s leakage.

◆ Accessories:
- ➢ Pipe fitting: 2 pcs
- ➢ Screw cap: 2 pcs
- ➢ O seal gasket: 2 pcs

Notification:

◆ Delivery and storage
- ➢ Please keep the meters upward and avoiding collision during delivery process. The meter should be stored in a drying location without corrosive medium and with a temperature among –30 ºC to 60 ºC.

◆ Installation
- ➢ The installation position should be far from fire, moisture , violent vibration and direct sun shine.
- ➢ Please make gas piping system cleaning and seal before install the meter.
- ➢ Please verify the right connection direction, that is connector at the end of upper case arrow should be connected to gas supply pipe.
- ➢ Please install meter upward.
- ➢ The tighten torque put on screw connector should be less than 170 N•m, and the bending moment should be less than 60 N•m
- ➢ A valve should be installed before inlet of meter in gas piping system.