Es.: 5421 SCREW - BHG Configuration

BHG

Cover			
Code	**A** = LPG B/C	**B** = LPG C/B	**C** = LPG B/B

Lever					
Code	**H** for mod. 1-2	**M** for mod. 1-2 with REED activation	**S** for mod. 2-3	**E** for mod. 2 with REED activation	**F** for mod. 4

Noozle holder				
	MOD. 1	**MOD. 2**	**MOD. 3**	**MOD. 4**

Swivel			
Code	**G** = 1” GAS	**N** = 3/4 NPT	**M** = M30x1,5

Data sheet

Maximum operating pressure	25 Bar
Static test	40 Bar
Dynamic test	25 Bar
Maximum flow rate	40 l/min at 8 Bar
Release of gas when disconnected	2,9 cm^3
Operating temperature	-20°C - +65°C
Weight	1,35 Kg
Type of coupling	Screw
Hooking on car	Screw hooking bush
Swivel connection	1”GAS-3/4NPT-M30x1,5
Sleeve made of anti-spark material	
Antistatic body and plastic materials	

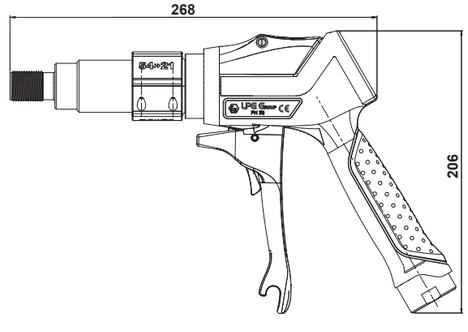

54»21



5421 SCREW

LPG GROUP SRL Via Rinascita, 38, Ozzano dell’Emilia (BO) Italy
T. +39.051.652 2059 _ www.lpggroup.eu

5421 SCREW

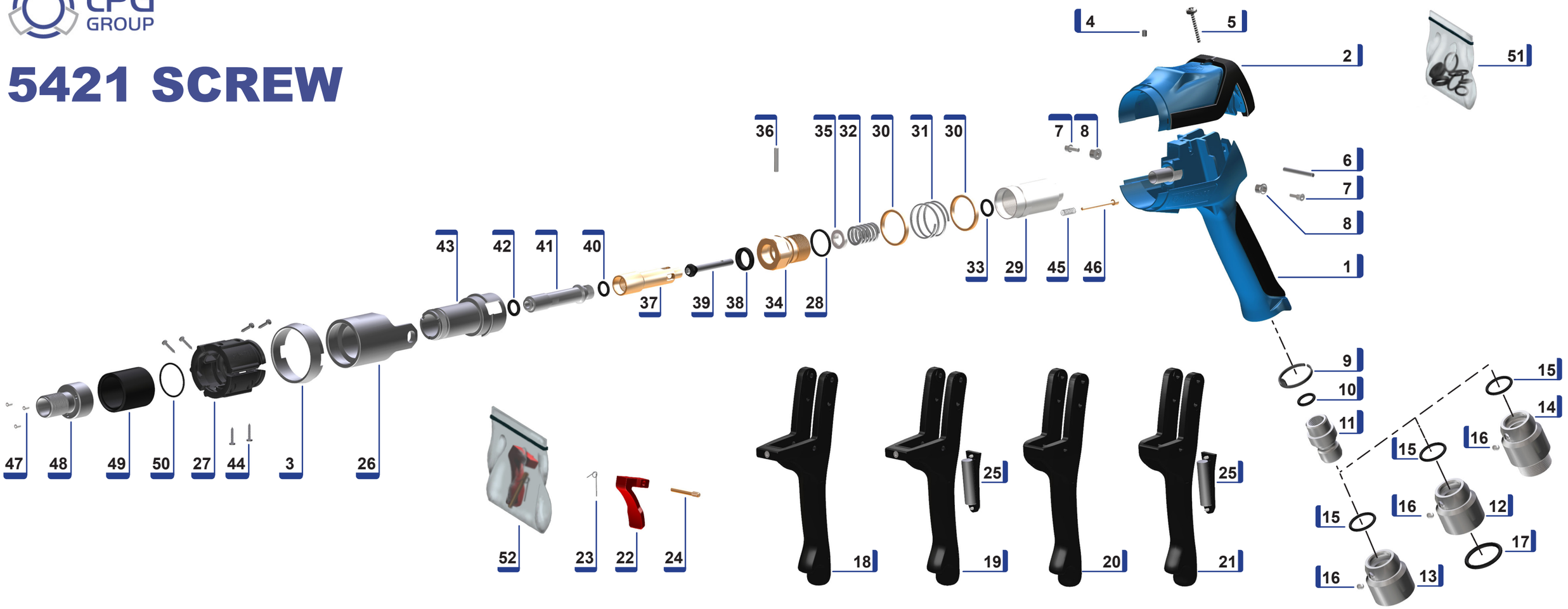

N.	Description	Code	Qt.y
1	Nozzle body B/C	5432_40_1	1
	Nozzle body C/B	5432_40_2	1
	Nozzle body B/B	5432_40_3	1
2	LPG Cover B/C	5421_45_1	1
	LPG Cover C/B	5421_45_2	1
	LPG Cover B/B	5421_45_3	1
	GPL Cover B/C	5421_48_1	1
	GPL Cover C/B	5421_48_2	1
	GPL Cover B/B	5421_48_3	1
	LPG Cover FR B/C	5421_56_1	1
	LPG Cover FR C/B	5421_56_2	1
	LPG Cover FR B/B	5421_56_3	1
3	CLOSING RING	5421_31	1
4	SCREW	5421_318	1
5	SCREW	5421_315	1
6	LEVER FULCRUM	5421_67	1
7	SCREW	5421_317	2

N.	Description	Code	Qt.y
8	FULCRUM BUSH	5421_71	2
9	RETAINING RING	5421_34	1
10	O-RING 115	5421_331	1
11	CENTRAL FERRULE	5421_36	1
12	FERRULE 1'' GAS	5421_37	1
13	FERRULE 3/4 NPT	5421_38	1
14	FERRULE M30x1,5	5421_35	1
15	O-RING 3081	5421_332	1
16	STEEL BALL 1/4	LPG_0201	10
17	O-RING 4112	LPG_0204	1
18	H LEVER	5421_12-H	1
19	M LEVER WITH MAGNET	5421_12-M	1
20	S LEVER	5421_15-S	1
21	E LEVER WITH MAGNET	5421_15-E	1
22	TRIGGER	5421_62	1
23	TRIGGER SPRING	5421_63	1

N.	Description	Code	Qt.y
24	TRIGGER PIN	5421_68	1
25	MAGNET KIT	5421_19	1
26	SLEEVE A/S	5421_179	1
27	EXTERNAL FERRULE A/S	5421_181	3
28	O-RING 128	5421_333	1
29	VALVE BODY	5421_115	1
30	SHAVING RING	5421_122	2
31	RETURN SPRING	5421_123	1
32	VALVE SPRING	5421_125	1
33	O-RING 115	5421_331	1
34	HEAD VALVE	5421_175	1
35	WASHER	5421_124	1
36	PIN HEAD	5421_305	1
37	VALVE PLUNGER SCREW	5421_196	1
38	LIP GASKET DI062	LPG_0207	1
39	VALVE 118	5421_118	1

N.	Description	Code	Qt.y
40	O-RING 112	5421_335	1
41	VALVE STEM SCREW	5421_197	1
42	ORM 0090-30	5421_336	1
43	SCREW HOOKING BUSH	5421_198	1
44	SCREW	5421_320	6
45	SECURITY LOCK SPRING A/S	5421_185	1
46	SECURITY LOCK A/S	5421_184	1
47	SCREW PP M4x6	5421_318	3
48	HEAD HOOKING SCREW	5421_195	1
49	SCREW EXTERNAL SPACER	5421_199	1
50	O-RING 2118	5421_337	1
51	SCREW GASKET KIT	5421_344	1
52	TRIGGER KIT	5421_347	1